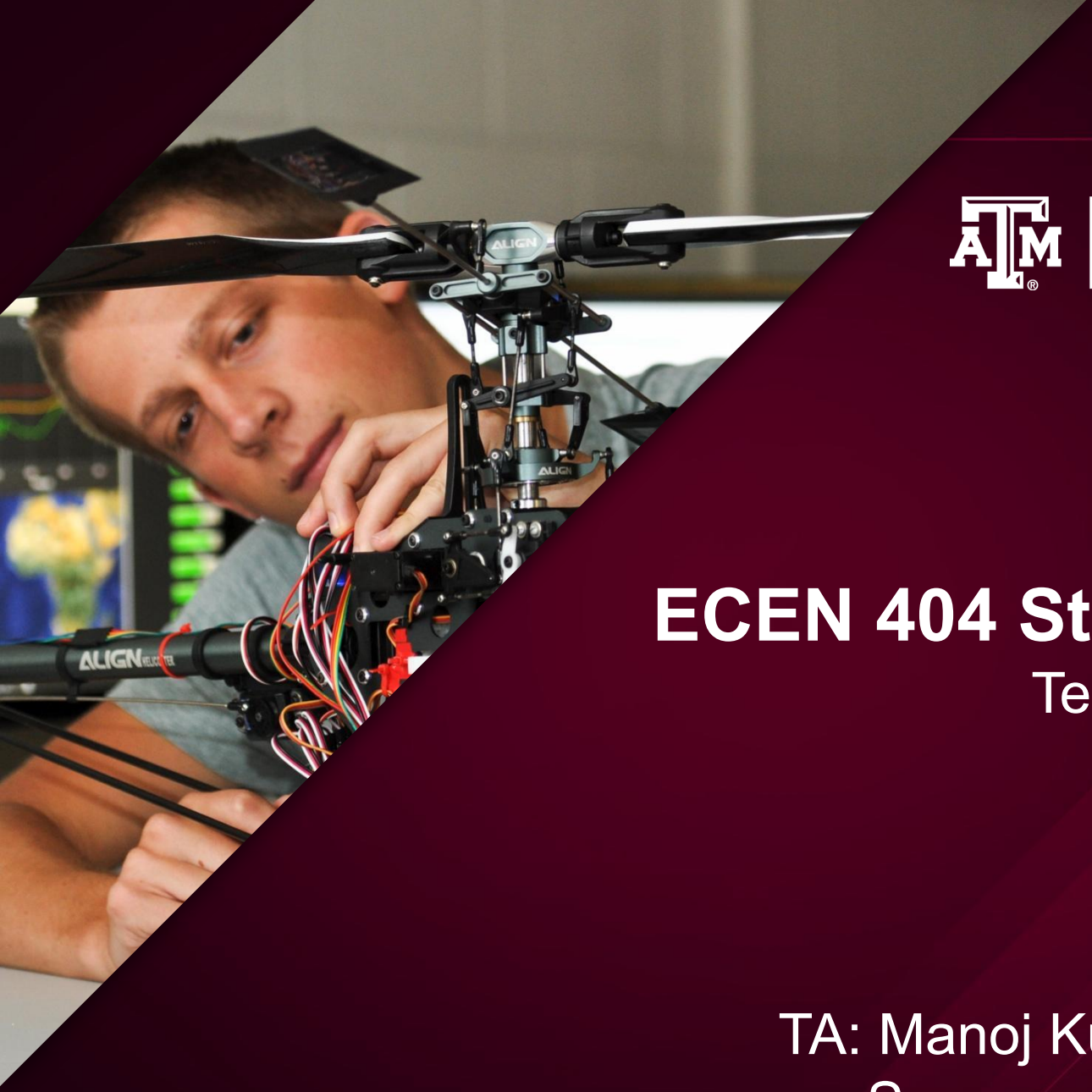

Dwight Look College of
ENGINEERING
TEXAS A&M UNIVERSITY

ECEN 404 Status Update 2

Team 12: TI-Amplifier
Braeden Murdock
Cole Keating
Haotian Guan
Jonathan Roman
TA: Manoj Kumar Balamurugan
Sponsor: Texas Instruments

Dwight Look College of
ENGINEERING
TEXAS A&M UNIVERSITY

Project Timeline

02/16/26

Solder Integrated PCB

Solder the integrated PCB received with all subsystems. Address any integration issues found.

02/23/26

Update and order the second iteration of the integrated PCB

Continue debugging power, analog, and digital subsystems
Address integration issues discovered during system testing

03/02/26

Receive updated PCB and continue integration / continue to debug first iteration

Continue debugging UI
Begin soldering the second iteration of the board

03/09/26

Continue Integration

Finish soldering and test functionality of combined board

Dwight Look College of
ENGINEERING
TEXAS A&M UNIVERSITY

Subsystem 1 - Mobile App

Haotian Guan

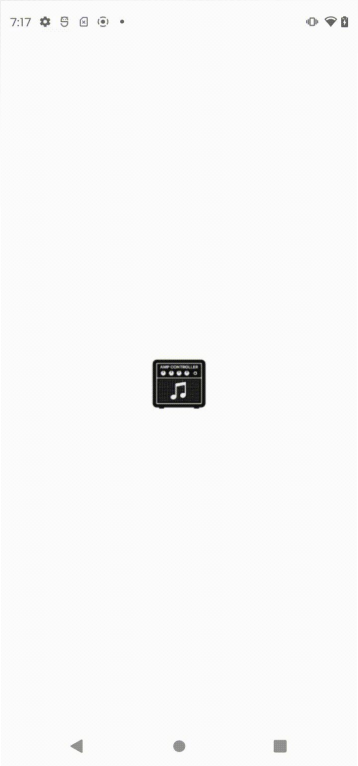

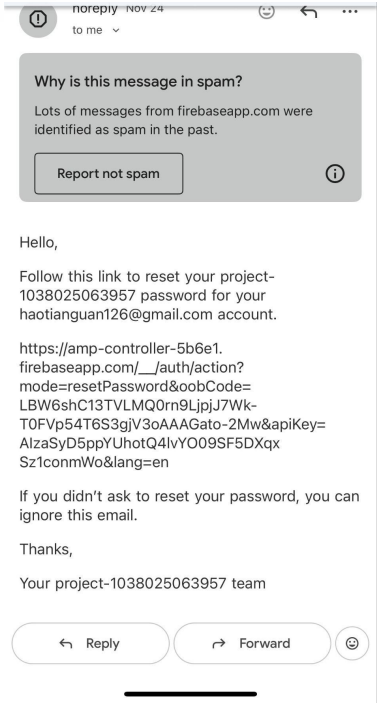

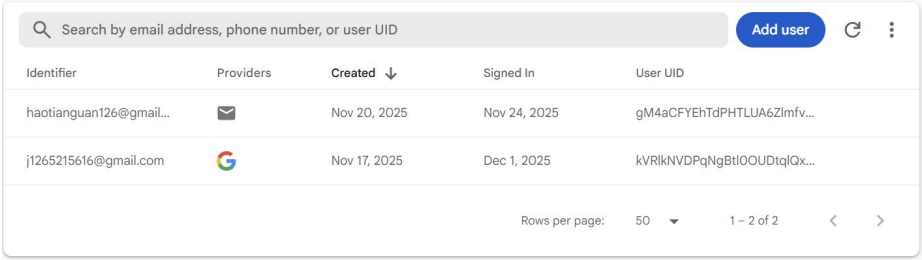

Subsystem 1 - Mobile App

Haotian Guan

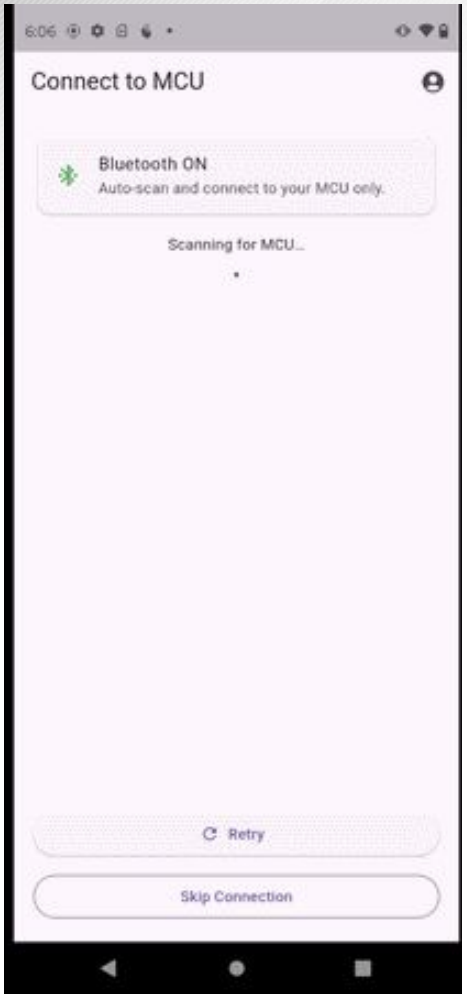


```
D/[FBP-Android](17452): [FBP]   status: 0GATT_SUCCESS
D/BluetoothGatt(17452): onConnectionUpdated() - Device=74:4D:BD:68:61:3E interval=39 latency=0 timeout=500 status=0
D/[FBP-Android](17452): [FBP] onMethodCall: setNotifyValue
D/BluetoothGatt(17452): setCharacteristicNotification() - uuid: 00002a05-0000-1000-8000-00805f9b34fb enable: true
D/[FBP-Android](17452): [FBP] onDescriptorWrite:
D/[FBP-Android](17452): [FBP]   chr: 2a05
D/[FBP-Android](17452): [FBP]   desc: 2902
D/[FBP-Android](17452): [FBP]   status: GATT_SUCCESS (0)
D/[FBP-Android](17452): [FBP] onMethodCall: writeCharacteristic
D/[FBP-Android](17452): [FBP] onCharacteristicWrite:
D/[FBP-Android](17452): [FBP]   chr: df170f02-3641-4594-806d-c113a27ce6cb
D/[FBP-Android](17452): [FBP]   status: GATT_SUCCESS (0)
I/flutter (17452): [BLE WRITE] port=2 value=13
I/flutter (17452): [FBP] stopScan: already stopped
D/[FBP-Android](17452): [FBP] onMethodCall: writeCharacteristic
D/[FBP-Android](17452): [FBP] onCharacteristicWrite:
D/[FBP-Android](17452): [FBP]   chr: df170f02-3641-4594-806d-c113a27ce6cb
D/[FBP-Android](17452): [FBP]   status: GATT_SUCCESS (0)
I/flutter (17452): [BLE WRITE] port=0 value=30
D/[FBP-Android](17452): [FBP] onMethodCall: writeCharacteristic
D/[FBP-Android](17452): [FBP] onCharacteristicWrite:
D/[FBP-Android](17452): [FBP]   chr: df170f02-3641-4594-806d-c113a27ce6cb
D/[FBP-Android](17452): [FBP]   status: GATT_SUCCESS (0)
I/flutter (17452): [BLE WRITE] port=1 value=0
D/[FBP-Android](17452): [FBP] onMethodCall: writeCharacteristic
D/[FBP-Android](17452): [FBP] onCharacteristicWrite:
D/[FBP-Android](17452): [FBP]   chr: df170f02-3641-4594-806d-c113a27ce6cb
D/[FBP-Android](17452): [FBP]   status: GATT_SUCCESS (0)
I/flutter (17452): [BLE WRITE] port=2 value=0
D/[FBP-Android](17452): [FBP] onMethodCall: writeCharacteristic
D/[FBP-Android](17452): [FBP] onCharacteristicWrite:
D/[FBP-Android](17452): [FBP]   chr: df170f02-3641-4594-806d-c113a27ce6cb
D/[FBP-Android](17452): [FBP]   status: GATT_SUCCESS (0)
I/flutter (17452): [BLE WRITE] port=3 value=0
D/BluetoothGatt(17452): onClientConnectionState() - status=0 clientIf=6 device=74:4D:BD:68:61:3E
D/[FBP-Android](17452): [FBP] onConnectionStateChange:disconnected
D/[FBP-Android](17452): [FBP]   status: SUCCESS
D/BluetoothGatt(17452): close()
```

Dwight Look College of
ENGINEERING
TEXAS A&M UNIVERSITY

Subsystem 1 - Mobile App

Haotian Guan

Localization

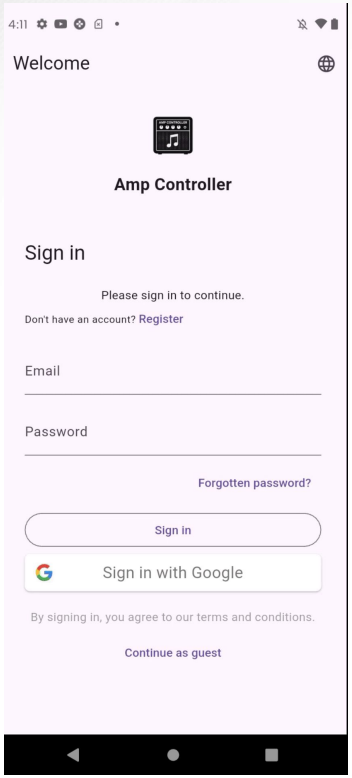

Volume and EQ Control

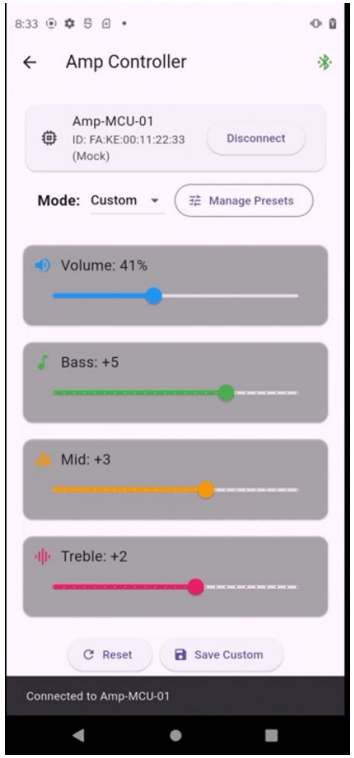

Preset Management

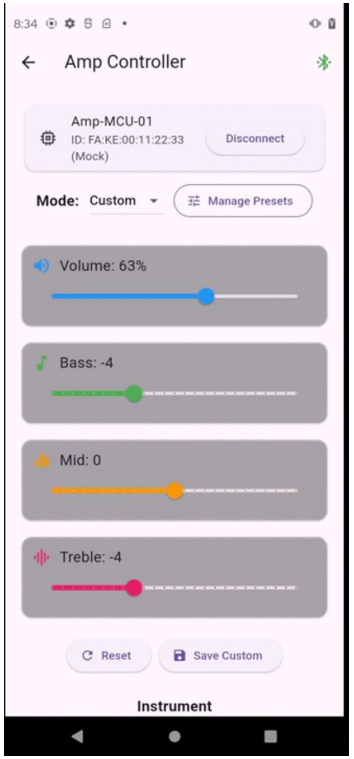

Electrical Piano

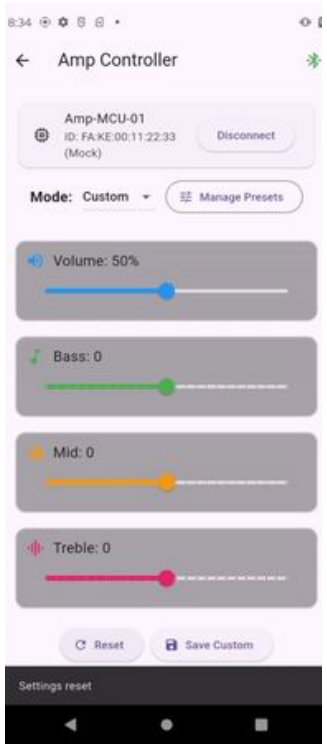

Subsystem 1 - Mobile App

Haotian Guan

Accomplishments since last presentation 12 hrs of effort	Ongoing progress/problems and plans until the next presentation
• Implement connection detector	• Continue testing connection and data transmission from mobile app to MCU

Subsystem 2 - Microcontroller

Jonathan Roman

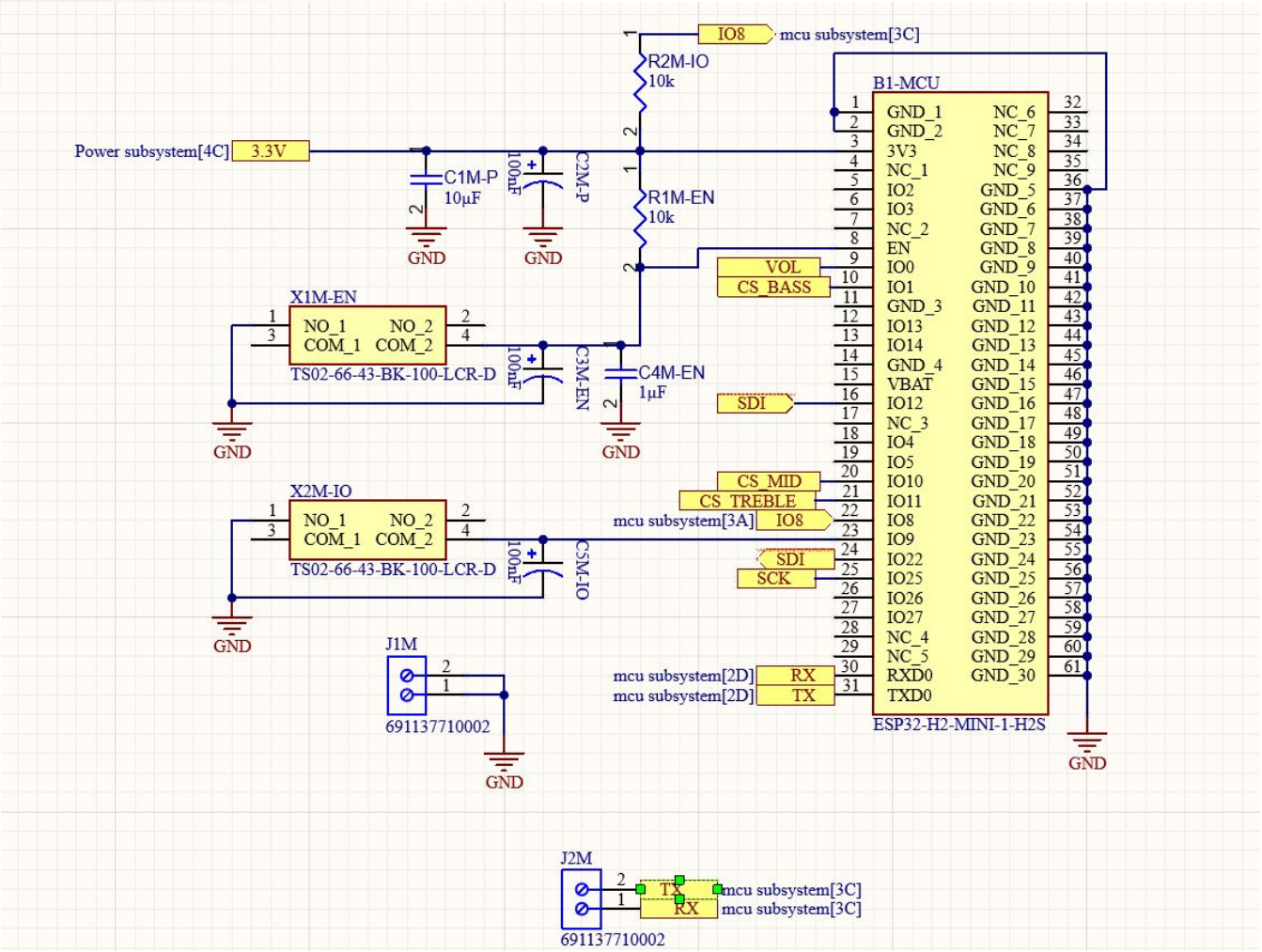

Dwight Look College of
ENGINEERING
TEXAS A&M UNIVERSITY

Subsystem 2 - Microcontroller

Jonathan Roman

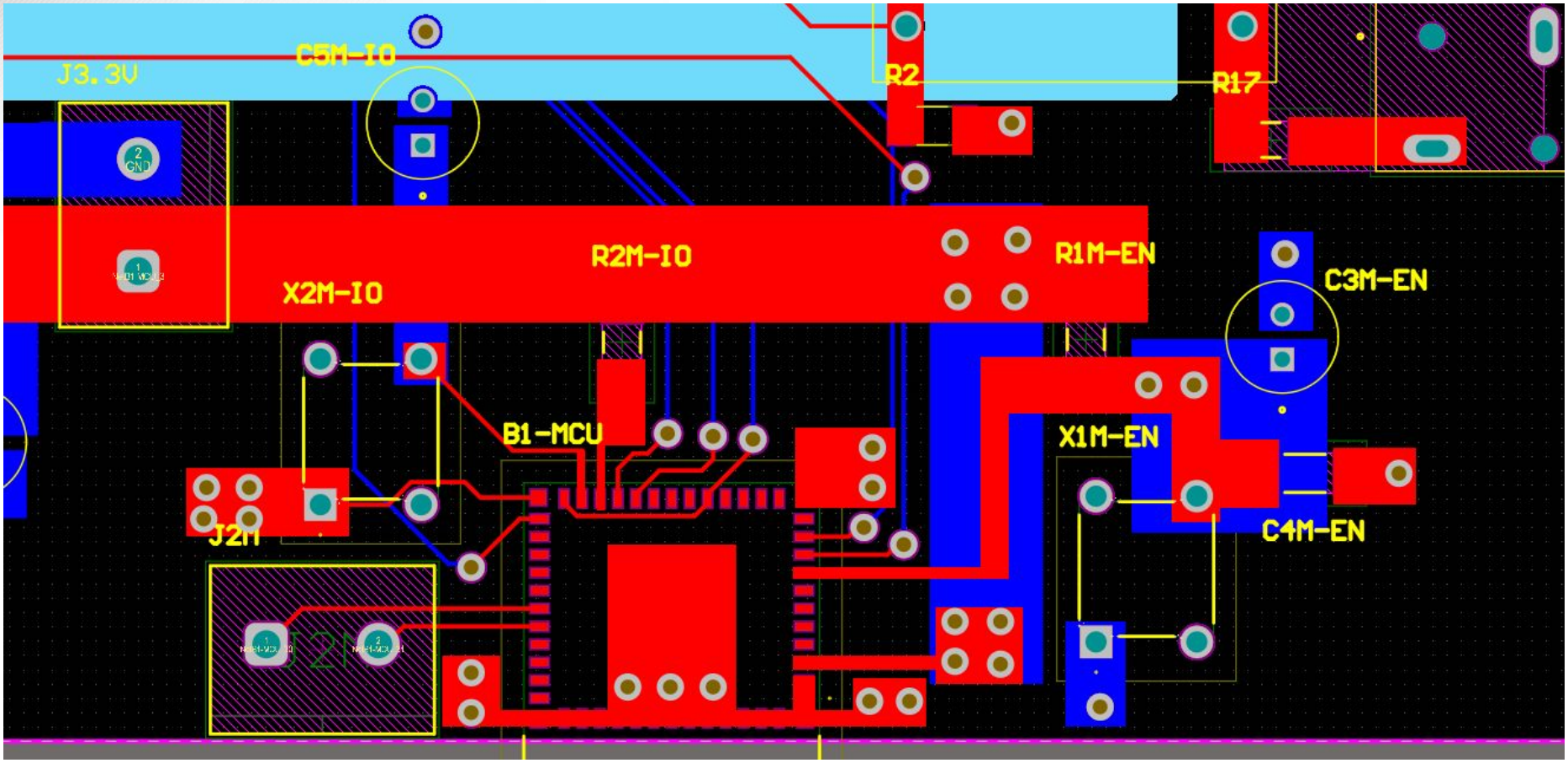

Subsystem 2 - Microcontroller

Jonathan Roman

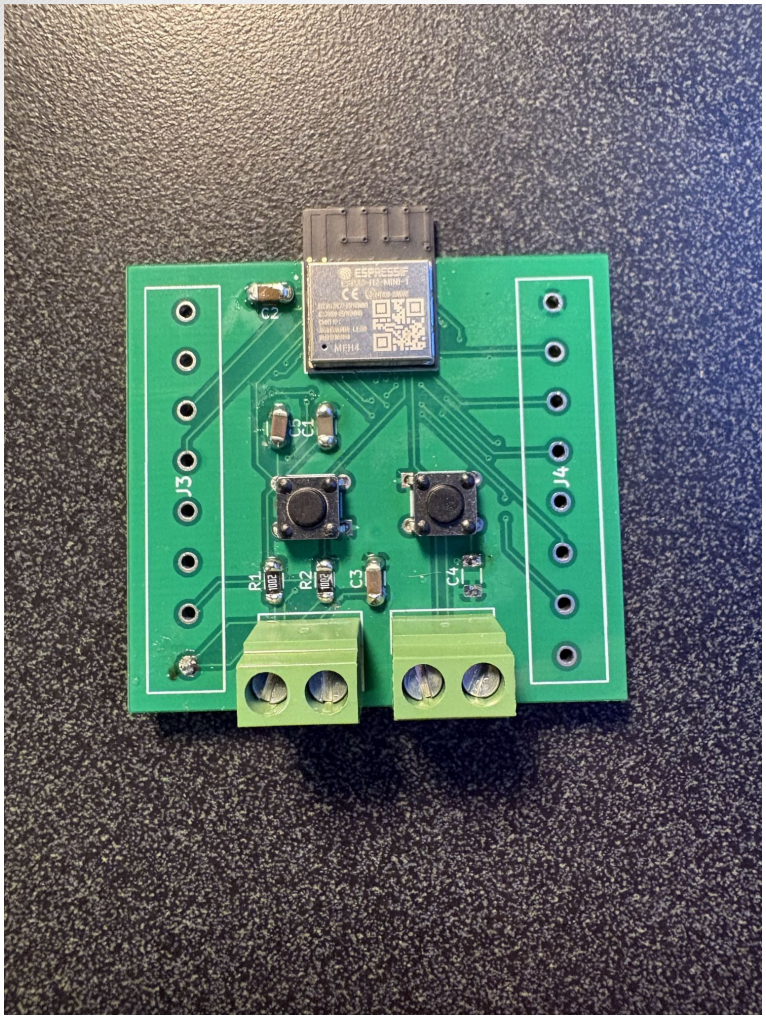

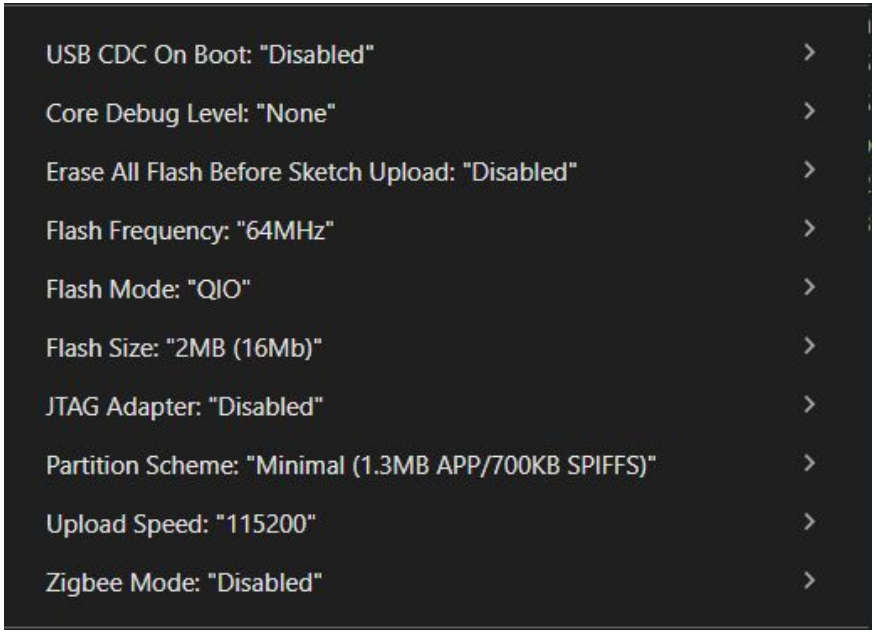

Subsystem 2 - Microcontroller

Jonathan Roman

Accomplishments since last presentation 30 hrs of effort	Ongoing progress/problems and plans until the next presentation
• Tested and Refined individual Subsystem Board • Assisted in assembly of integrated board • Debugged and tested the MCU on the integrated board • Assisted in designing a base framework for an updated integrated board	• Continue testing on the integrated board • Refine and order an updated integrated board

Integrated Board

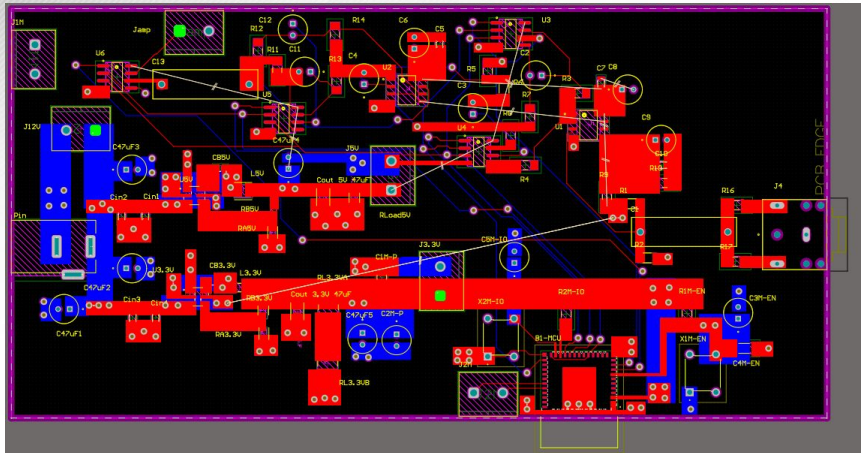

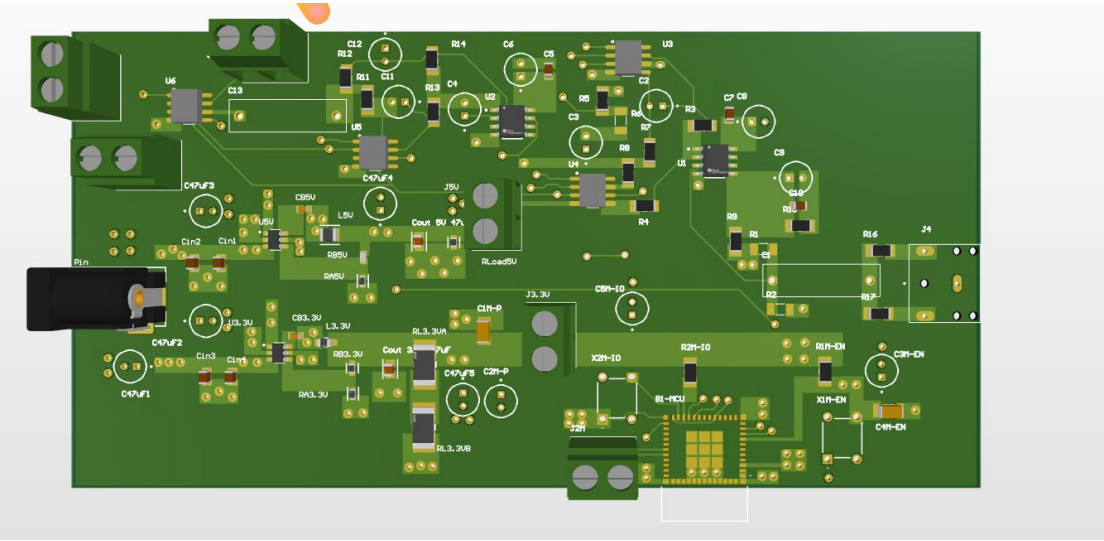

Integrated Board Subsystem tests

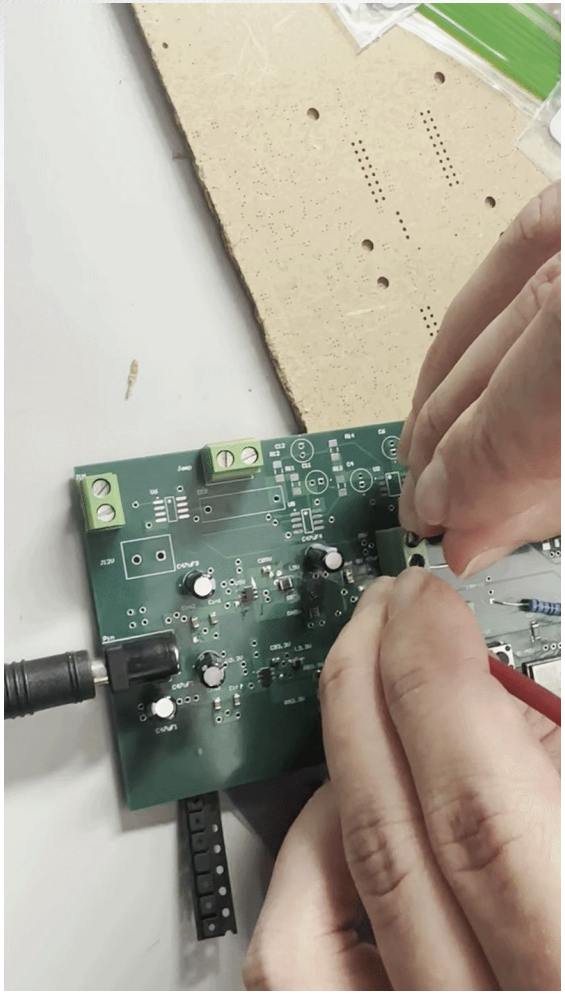

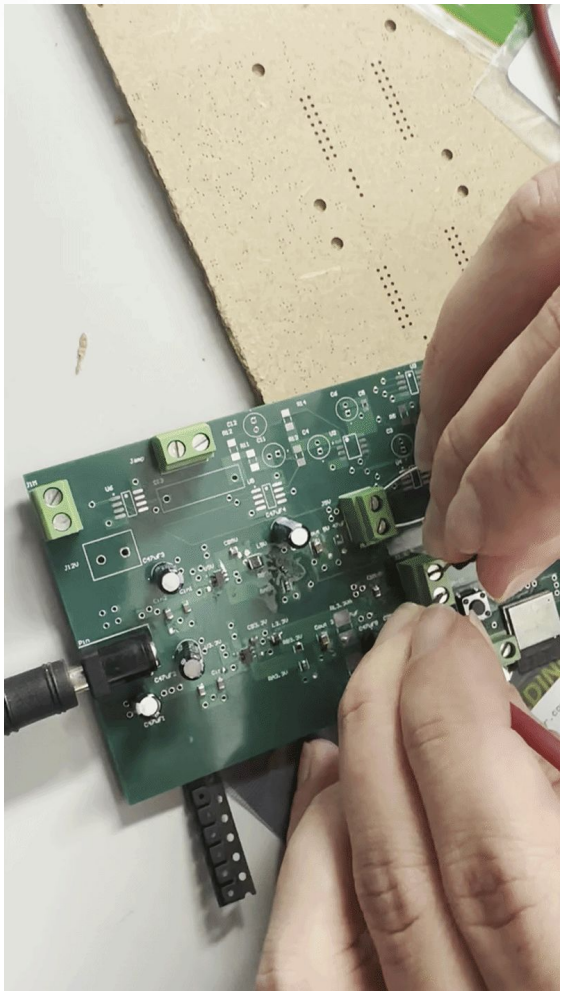

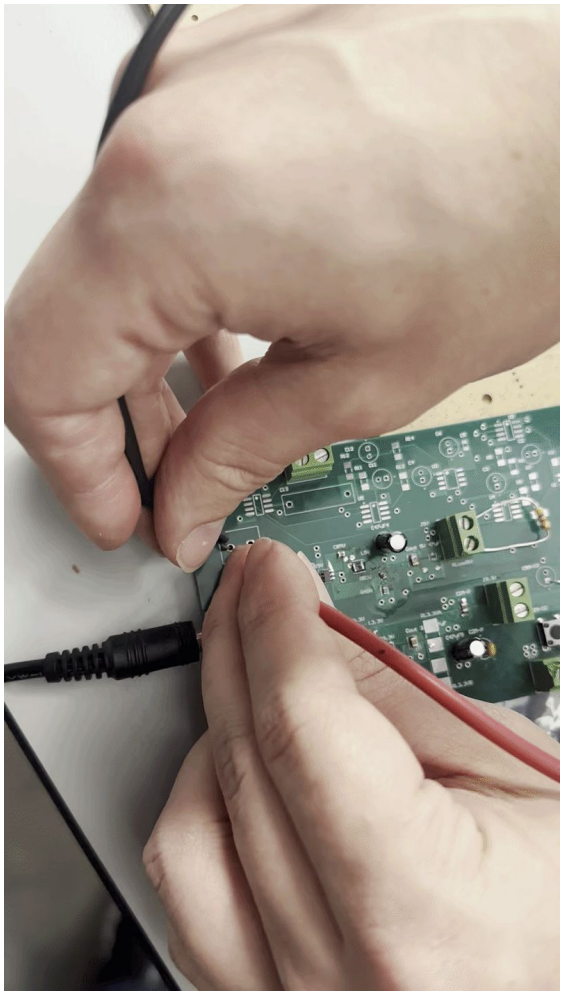

Subsystem 3 - Power System

Braeden Murdock

Accomplishments last presentation 30 hrs of effort	Ongoing progress/problems and plans until the next presentation
• Got the integrated PCB • Got parts for the Power and preamplifier subsystems • Tested the power subsystem	• Do more tests on the current integrated PCB with Cole and Jonathan

Dwight Look College of
ENGINEERING
TEXAS A&M UNIVERSITY

Subsystem 4 - Next Iteration of Integrated PCB

Cole Keating

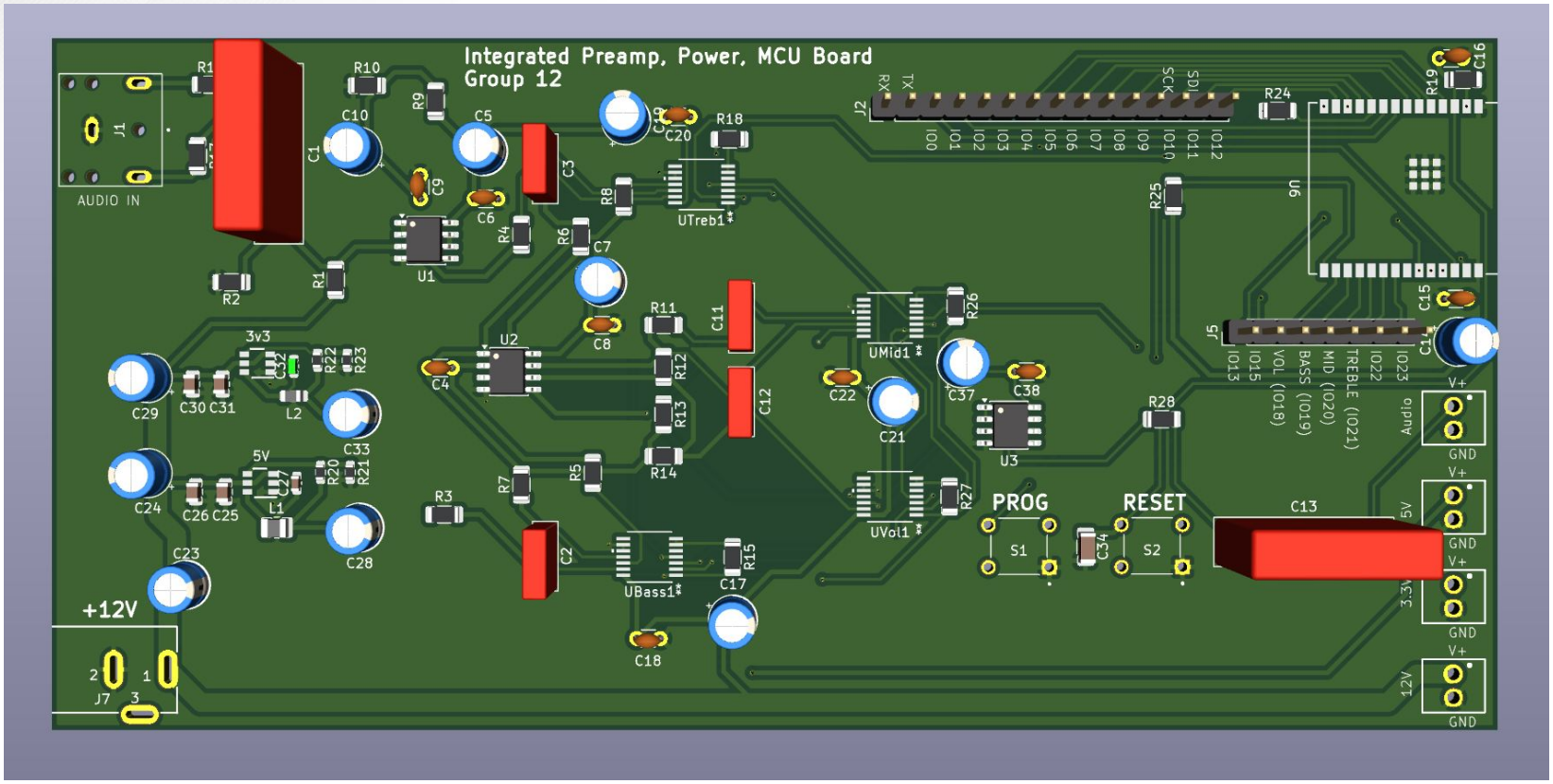

Subsystem 4 - Next Iteration of Integrated PCB

Cole Keating

Changes made so far:

- Switched ESP32 module to same model, but with a hand-solderable footprint.
- Identified issue with digital potentiometer. voltage levels, upgraded to high voltage model of same chip.
- Added debugging header for ESP32 module, more silkscreen labelling for the many connectors on board.
- Board is now two layers for quicker turnaround on PCB manufacturing.

Subsystem 4

Cole Keating

Accomplishments since last presentation 32 hrs of effort	Ongoing progress/problems and plans until the next presentation
• Designed next iteration of integrated PCB with Jonathan - will order after testing current one • Helped assemble integrated board, participated in Blitz • Recognized issue with digital potentiometers, integrated fix into new design • Found temporary solution for current board	• Need lots of testing and verification on current integrated PCB before ordering next version • Power Amp board needs to be assembled - this week

Validation Plan

3	Test Name	Success Criteria	Methodology	Status	Responsible Engineer(s)
3.2.3.1	Verify input signal levels	Based on research, standard line level signal is 1.4Vpeak, need to ensure this as this is what preamp is biased around	Connect 3.5mm audio cable to source computer, Measure peak voltages to ensure amp isn't being over or underdriven	Tested	Cole Keating
3.2.3.2	Measure power amp heat dissipation	TPA3116 should not enter thermal protection during test	Place cooling solution on chip, power a 8 Ohm load for 30+ minutes without the FAULT pin on the IC going high (indicating thermal protection)	Tested	Cole Keating
3.2.3.3	Verify preamp output signal levels	Preamp output should never exceed 3Vpeak - From MAX9744 datasheet. Signal at max gain should not exceed this	Make sure 0dB bias level is below 10dB of 3V. Set input signal to 1.4V at a mixer frequency. Move potentiometer for max gain, verify output does not exceed 3V peak on oscilloscope.	Tested	Cole Keating
3.2.3.4	Verify power amp output signal level	Power amp output should be able to drive a 8 ohm speaker at 5W without clipping.	Place load on output, verify output levels do not clip.	Tested	Cole Keating
3.2.3.5	Verify THD parameters	THD < 5% at 1WRMS, THD <0.1% at 0.1W RMS	Use FRA mode on oscilloscope while driving a 1W and 0.1W load. Record THD levels.	Tested	Cole Keating
3.2.3.6, 3.2.4.2	Integration of MCU EQ Control	MCU is able to command digital potentiometer. Digital potentiometer controls preamp mixing, volume.	Connect digital potentiometers to pin headers on preamp. Run MCU test code that sweeps potentiometers. Verify digital potentiometer controls preamp, volume	Test in 404	Cole Keating Jonathan Roman
3.2.2	Verify Power levels	Based on research and simulations nothing in the circuit should exceed 2 Watts of power	Connect Power management subsystem to Power input and measure all outputs to make sure they are within the criteria	Tested	Braeden Murdock
3.2.2.1	Verify input voltage levels	Each subsystem needs varous input voltage supplies which are 12V, 5V, and 3.3V. The power management subsystem should output all desired levels of voltage	Measure output voltages of power management subsytem when powered on, by measureing the connectors that would lead to the other subsystems that need the Voltages described previously	Tested	Braeden Murdock
3.2.2.2	Verify input current	Each subsystem has current draw that needs to be matched for the system to work. These range from 16 mA, 0.5 A and 4mA	Set up load resistors that will have the required voltage draw and measure the current through each to make sure that the power management subsystem can match	Tested	Braeden Murdock

Validation Plan Continued

3.2.4.1	Verify Wireless Connection	MCU is able to connect wirelessly to a mobile device. Mobile Device is used to send signals translated by the MCU	Power the MCU with a 3.3V Source. Connect through a generic Bluetooth integration. Send and recieve signals	Tested	Jonathan Roman
3.2.4.1	Verify Wireless Connection With Mobile App	MCU is able to connect wirelessly to the Mobile App subsystem. Mobile App is used to send signals translated by the MCU	Power the MCU with a 3.3V Source. Connect through integrated Mobile App. Recieve and output signals	Tested	Hoation Guan Jonathan Roman
3.2.4.2	Verify Signal Translation	MCU correctly translates input signals to respective SPI output.	Connect wirelessly to the MCU. Send preset signal pairs and verify output	Tested	Jonathan Roman
3.2.4.2	Verify PCB implementation	MCU behaves as expected on PCB implementation	Connect wirelessly to the PCB integrated MCU. Send preset signal pairs and verify output	TESTING/Test in 404	Jonathan Roman
3.2.1.1	Verify the user feedback	Ensure UI give an feedback when use adjust the app setting.	When sliding the control slider, a small prompt appears below indicating the change has been applied. Additionally, a touch effect is displayed when the slider is touched.	Tested in 403	Haotian Guan
3.2.1.2	Verify data saving	Ensure the data stored in the app database, checking database won't lose any data once close the app.	A data storage page has been set up to save all changes, allowing users to view them at any time.	TESTING	Haotian Guan
3.2.1.3	Verify the login page	Ensure users can log in using their Google account or register by using the email. Confirm the firebase stored the accounts.	Use Firebase for Flutter to set up a login page with Google accounts. Click “Sign in as guest” to use the app immediately.	Tested in 403	Haotian Guan
3.2.1.4	Verify the BLE connection	Ensure standardized commands sent to the MCU via BLE	Using Flutter's flutter_blue_plus, find the Service UUID and Characteristic UUID of the MCU, and then the App sends 2 bytes [portal, value] to MCU, where portal select valume/bass/mid/treble and value is the user-selected level.	Tested	Haotian Guan Jonathan Roman
3.2.1.5	Verify the anto disconnection	Ensure the mobile app UI return to the connection page once disconnection with MCU	Returning back to connection page once the MCU disconnection with mobile app, and exceeding the notification will alert the user.	Testing	Haotian Guan

Execution Plan

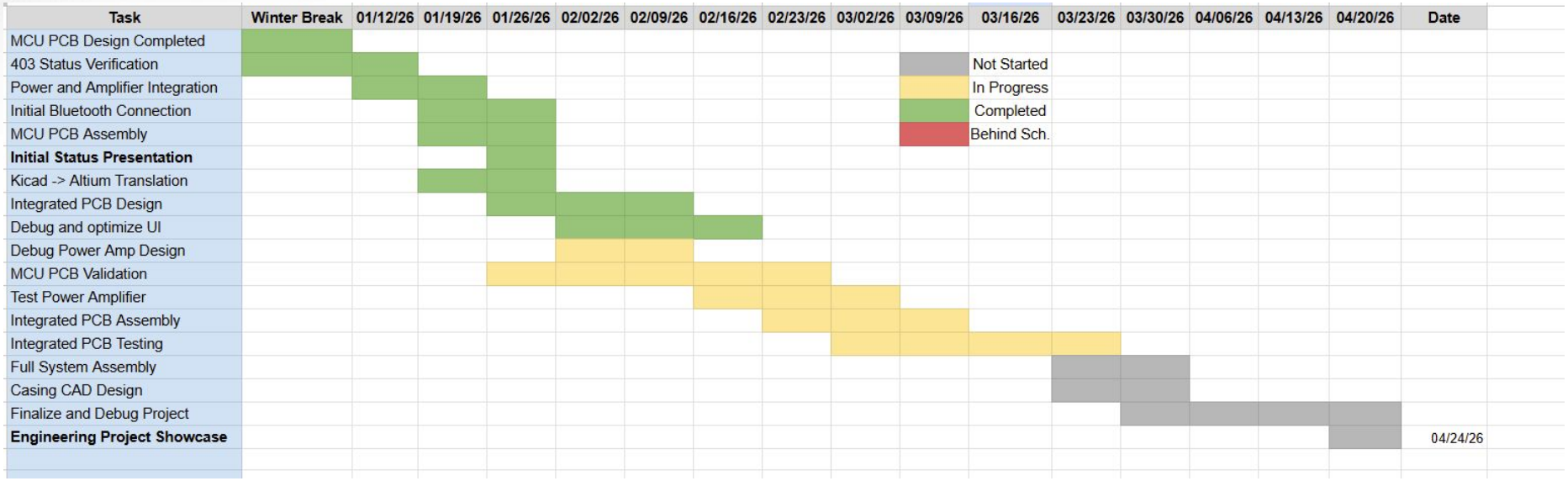

Team 12 – TI-Amplifier

Braeden Murdock
Cole Keating
Haotian Guan
Jonathan Roman

Thank you for your attention!
We appreciate your time and interest in our project.
We're happy to take any questions.